®

-VALVE

首龍工業股份有限公司

SOWLONG INDUSTRIAL . CO.,LTD.

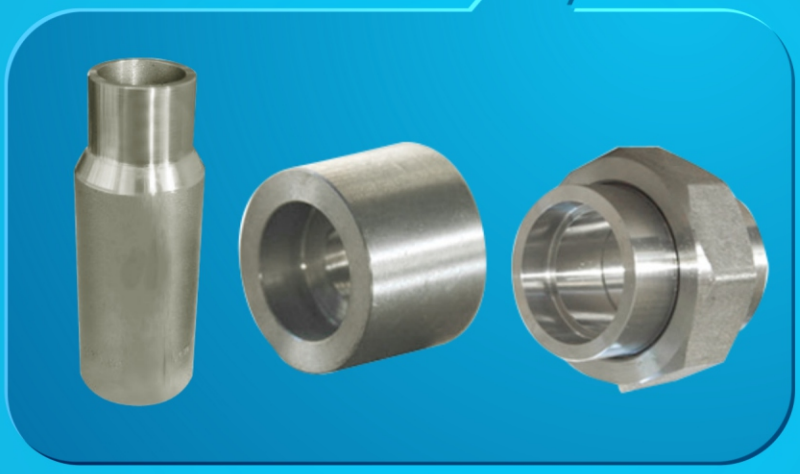

6D-0541

Management System ISO 9001:2008

TÜVRheinland CERTIFIED

www.tuv.com ID 9105025885

CE 0035

INTRODUCTION

SOWLONG INDUSTRIAL.CO.,LTD. is equivalent to Win-Win, existing in between both consumers and manufacturer, both devoted employers and valued employees, a bilateral satisfaction.

Ever since its establishment in 1979, with the spirit of pursuing most advanced technology and striving for the ultimate quality-oriented products, the company is continuously utilizing the most up-to-date hi-tech facilities and most sophisticated manufacturing techniques, on the basis of skilled manpower and accumulated experiences, SOWLONG INDUSTRIAL.CO.,LTD. has been well-recognized among customers worldwide for the excellence of Quality and Services which has enabled us to win the unrivalled reputation in our industries.

QUALITY ASSURANCE

It is our indelible belief in Quality First.

SOWLONG INDUSTRIAL.CO.,LTD's Quality Management System has been certified with ISO 9001:2015, PED, together with all major international-recognized certificates and being granted as an approval vendor for ARAMCO, also being listed on the Approval Supplier List of major domestic refineries, petro-chemical factories in Taiwan.

SOWLONG INDUSTRIAL.CO.,LTD. prides itself in having the best service performance in our industries which can only attribute it to the quality of people we employ and the amicable relationship and close partnership we have buit-up with all our customers, and the company will continue its ultimate efforts to satisfy all its customers' demands byproviding top quality products and high efficient services by anticipating the continued encouragement and supports from all its customers in the years ahead.

PRODUCTION RANGE AND SPECIFICATION :

TYPE：A.ELBOW,TEE,COUPLING,HALF COUPLING,CAP, PLUG, BUSHING, UNION,OUTLET,SWAGE NIPPLE, BULL PLUG,REDUCER INSERT AND HEX.NIPPLE,STREET ELBOWS, BOSS,...ETC.

B.SOCKET-WELD,THREADED (NPT, and PT,and BSP (ISO7-1, ISO228-1)),BUTT-WELDING.

SIZE：NPS 1/8" ~ 4".DN 6 ～100

RATING：PRESSURE: THREADED END - 2000 / 3000 / 6000 LBS.
SOCKET-WELD END - 3000 / 6000 / 9000 LBS.
BUTT WELD END - sCH40 / SCH80 / SCH160/ XXS.

SPECIFICATIONS : A.DIM.SPEC.: ASME B16.11
MSS SP - 79,83,95,97 and Bs3799.

B. MATERIAL SPEC:ASME/ASTM SA/A105,SA/A350LF2, SA/A106,SA/A312,SA/A234,SA/A403.ASME/ASTM SA/A182 (F304,F304L, F316,F316L,F304H,F316H, F317L,F321F5,F9,F11 , F22,F44,F51/60,F53,F91).

C.SIZE of RAW MATERIAL : DIA.19 ~ 120mm ROUND BAR.

MARKING : A.CARBON and ALLOY STEEL: MARKED BY STAMPING or LASER MARKING.

B.STAINLESS STEEL: MARKED BYJETPRINTING or STAMPING or LASER MARKING.

C.3/8" UNDER : BRAND ONLY.

D.1/2" to 4":MARKED WITH BRAND,MATERIAL,HEAT CODE, B16(FORASMEB16.11PRODuCT),RATING and SIZE.

FORGED HIGH PRESSURE PIPE FITTINGS SOCKET WELD

3000-6000-9000 Lbs

ELBOW 90°

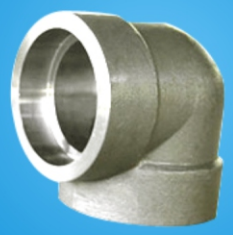

ELBOW 45°

TEE

CROSS

UNION

COUPLING

HALF COUPLING

CAP

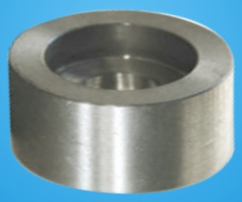

BOSS

OUTLET

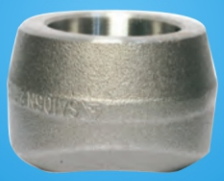

INSERT

WELDING OUTLET

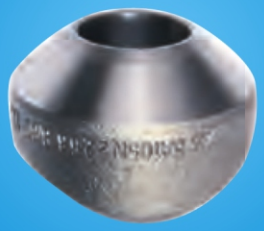

FORGED HIGH PRESSURE PIPE FITTINGS THREADED

2000-3000-6000 Lbs

ELBOW 90°

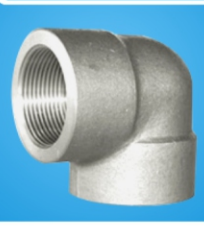

ELBOW 45°

TEE

CROSS

UNION

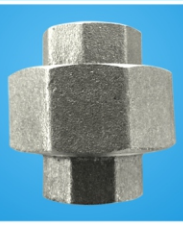

COUPLING

HALF COUPLING

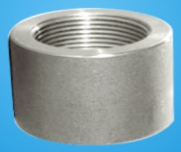

REDUCING COUPLING

CAP

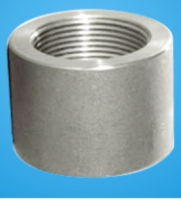

HEX HEAD BUSHING

HEX HEAD PLUG

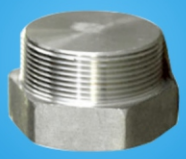

SQUARE HEAD PLUG

ROUND HEAD PLUG

BULL PLUG

BOSS

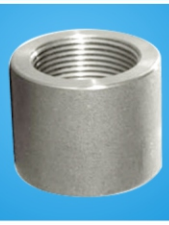

OUTLET

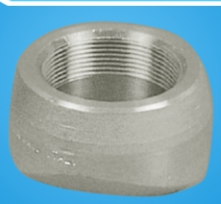

HEX NIPPLE

SWAGE NIPPLE

Socket-welding Elbows, Tees, And Crosses

ASMEB16.11-2016

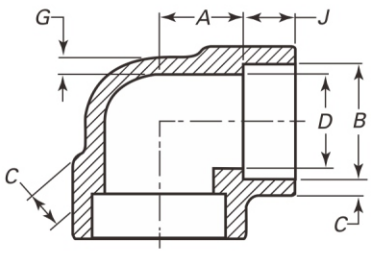

90° ELBOW

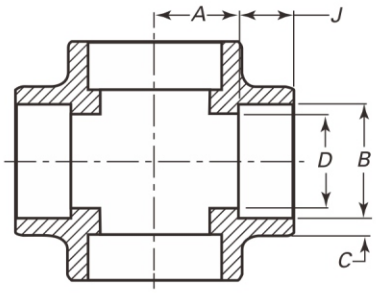

CROSS

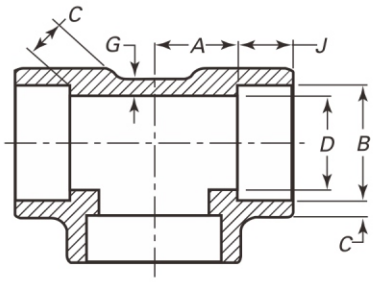

TEE

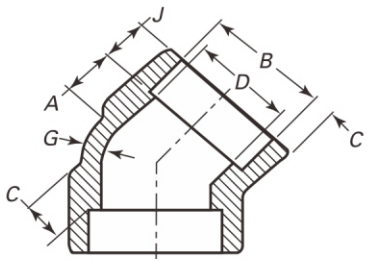

45° ELBOW

Dimensions are in Millimeters

Nominal Pipe Size	Socket Bore Diam.,B		Bore Diameter of Fittings, D						Socket Wall Thickness,C[Note (1)]						Body Wall,G			Socket Depth, J	Center-to-Bottom of Socket, A						Tol
			3000		6000		9000		3000		6000		9000		3000	6000	9000		90El,Cross,Tee			45-deg Elbow			
	Max.	Min.	Max.	Min.	Max.	Min.	Max.	Min.	Avg.	Min.	Avg.	Min.	Avg.	Min.	Min.	Min.	Min.	Min.	3000	6000	9000	3000	6000	9000	
1/8	11.2	10.8	7.6	6.1	4.8	3.2	…	…	3.18	3.18	3.96	3.43	…	…	2.41	3.15	…	9.5	11.0	11.0	…	8.0	8.0	…	1.0
1/4	14.6	14.2	10.0	8.5	7.1	5.6	…	…	3.78	3.30	4.60	4.01	…	…	3.02	3.68	…	9.5	11.0	13.5	…	8.0	8.0	…	1.0
3/8	18.0	17.6	13.3	11.8	9.9	8.4	…	…	4.01	3.50	5.03	4.37	…	…	3.20	4.01	…	9.5	13.5	15.5	…	8.0	11.0	…	1.5
1/2	22.2	21.8	16.6	15.0	12.5	11.0	7.2	5.6	4.67	4.09	5.97	5.18	9.35	8.18	3.73	4.78	7.47	9.5	15.5	19.0	25.5	11.0	12.5	15.5	1.5
3/4	27.6	27.2	21.7	20.2	16.3	14.8	11.8	10.3	4.90	4.27	6.96	6.04	9.78	8.56	3.91	5.56	7.82	12.5	19.0	22.5	28.5	13.0	14.0	19.0	1.5
1	34.3	33.9	27.4	25.9	21.5	19.9	16.0	14.4	5.69	4.98	7.92	6.93	11.38	9.96	4.55	6.35	9.09	12.5	22.5	27.0	32.0	14.0	17.5	20.5	2.0
1 1/4	43.1	42.7	35.8	34.3	30.2	28.7	23.5	22.0	6.07	5.28	7.92	6.93	12.14	10.62	4.85	6.35	9.70	12.5	27.0	32.0	35.0	17.5	20.5	22.5	2.0
1 1/2	49.2	48.8	41.6	40.1	34.7	33.2	28.7	27.2	6.35	5.54	8.92	7.80	12.70	11.12	5.08	7.14	10.15	12.5	32.0	38.0	38.0	20.5	25.5	25.5	2.0
2	61.7	61.2	53.3	51.7	43.6	42.1	38.9	37.4	6.93	6.04	10.92	9.50	13.84	12.12	5.54	8.74	11.07	16.0	38.0	41.0	54.0	25.5	28.5	28.5	2.0
2 1/2	74.4	73.9	64.2	61.2	…	…	…	…	8.76	7.67	…	…	…	…	7.01	…	…	16.0	41.0	…	…	28.5	…	…	2.5
3	90.3	89.8	79.4	76.4	…	…	…	…	9.52	8.30	…	…	…	…	7.62	…	…	16.0	57.0	…	…	32.0	…	…	2.5
4	115.7	115.2	103.8	100.7	…	…	…	…	10.69	9.35	…	…	…	…	8.56	…	…	19.0	66.5	…	…	41.0	…	…	2.5

NOTE:
(1) Average of socket wall thickness around periphery shall not be less than listed values.
The minimum values are permitted in localized areas.

Socket-Welding Couplings, Bosses, Caps, and Couplets

ASMEB16.11-2016

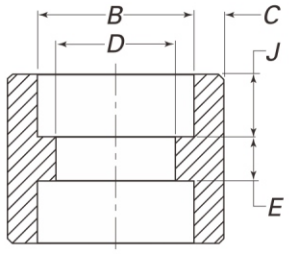

COUPLING

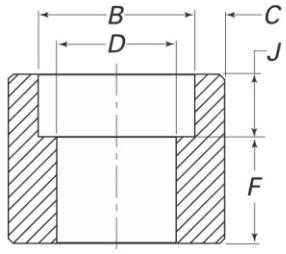

HALF COUPLING

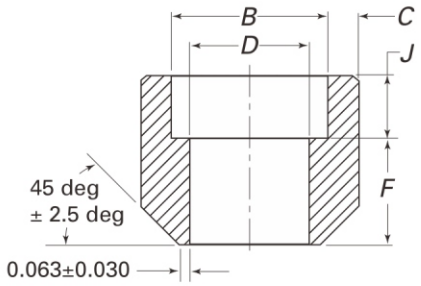

BOSS

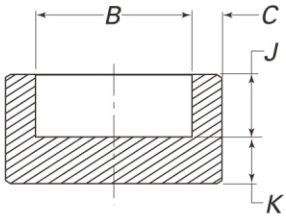

CAP

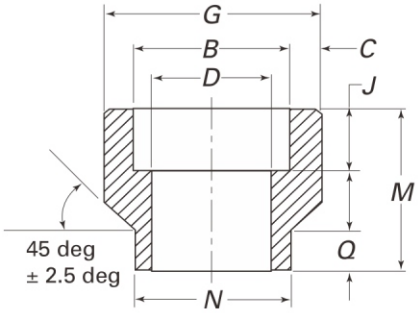

COUPLET

Dimensions are in millimeters.

Nominal Pipe Size	Socket Bore Dia.,B Max.	Socket Bore Dia.,B Min.	Bore Diameter of Fittings,D 3000 Max.	Bore Diameter of Fittings,D 3000 Min.	Bore Diameter of Fittings,D 6000 Max.	Bore Diameter of Fittings,D 6000 Min.	Bore Diameter of Fittings,D 9000 Max.	Bore Diameter of Fittings,D 9000 Min.	Socket Wall Thickness, [Note (1)].C 3000 Avg.	Socket Wall Thickness, [Note (1)].C 3000 Min.	Socket Wall Thickness, [Note (1)].C 6000 Avg.	Socket Wall Thickness, [Note (1)].C 6000 Min.	Socket Wall Thickness, [Note (1)].C 9000 Avg.	Socket Wall Thickness, [Note (1)].C 9000 Min.	Outside Dia. Couplet, G 3000	Outside Dia. Couplet, G 6000	Outside Dia. Couplet, G Tol. ±	Socket Depth,J Min.	Laying Lgth.,E ±	Laying Lgth.,E Tol. ±	Laying Lgth.,F ±	Laying Lgth.,F Tol. ±	End Wall Thickness, K 3000 Min.	End Wall Thickness, K 6000 Min.	End Wall Thickness, K 9000 Min.	End to End Couplet, M ±	End to End Couplet, M Tol. ±	Weld Ring Diameter, N ±	Weld Ring Diameter, N Tol. ±	Weld Ring Length, Q 3000/6000	Weld Ring Length, Q Tol ±
1/8	11.2	10.8	7.6	6.1	4.8	3.2	...	...	3.18	3.18	3.96	3.43	...	...	...	...	±1.5/-0.0	9.5	6.5	1.5	16.0	1.5	4.8	6.4	...	...	...	...	...	...	
1/4	14.6	14.2	10.0	8.5	7.1	5.6	...	...	3.78	3.30	4.60	4.01	...	...	23.8	25.4	±1.5/-0.0	9.5	6.5	1.5	16.0	1.5	4.8	6.4	...	30.2	±0.8/-0.0	17.5	±1.5/-0.0	9.5	0.8
3/8	18.0	17.6	13.3	11.8	9.9	8.4	...	...	4.01	3.50	5.03	4.37	...	...	27.0	31.8	±1.5/-0.0	9.5	6.5	3.0	17.5	3.0	4.8	6.4	...	30.2	±0.8/-0.0	20.7	±1.5/-0.0	9.5	0.8
1/2	22.2	21.8	16.6	15.0	12.5	11.0	7.2	5.6	4.67	4.09	5.97	5.18	9.35	8.18	33.4	38.1	±1.5/-0.0	9.5	9.5	3.0	22.5	3.0	6.4	7.9	11.2	33.4	±0.8/-0.0	23.8	±1.5/-0.0	9.5	0.8
3/4	27.6	27.2	21.7	20.2	16.3	14.8	11.8	10.3	4.90	4.27	6.96	6.04	9.78	8.56	38.1	44.5	±1.5/-0.0	12.5	9.5	3.0	24.0	3.0	6.4	7.9	12.7	34.9	±0.8/-0.0	27.0	±1.5/-0.0	9.5	0.8
1	34.3	33.9	27.4	25.9	21.5	19.9	16.0	14.4	5.69	4.98	7.92	6.93	11.38	9.96	46.1	57.2	±1.5/-0.0	12.5	12.5	4.0	28.5	4.0	9.6	11.2	14.2	47.6	±0.8/-0.0	42.9	±1.5/-0.0	9.5	0.8
1 1/4	43.1	42.7	35.8	34.3	30.2	28.7	23.5	22.0	6.07	5.28	7.92	6.93	12.14	10.62	55.6	63.5	±1.5/-0.0	12.5	12.5	4.0	30.0	4.0	9.6	11.2	14.2	47.6	±0.8/-0.0	42.9	±1.5/-0.0	9.5	0.8
1 1/2	49.2	48.8	41.6	40.1	34.7	33.2	28.7	27.2	6.35	5.54	8.92	7.80	12.70	11.12	63.5	76.2	±1.5/-0.0	12.5	12.5	4.0	32.0	4.0	11.2	12.7	15.7	50.8	±0.8/-0.0	49.2	±1.5/-0.0	9.5	0.8
2	61.7	61.2	53.3	51.7	43.6	42.1	38.9	37.4	6.93	6.04	10.92	9.50	13.84	12.21	79.4	92.1	±1.5/-0.0	16.0	19.0	4.0	41.0	4.0	12.7	15.7	19.0	57.2	±1.5/-0.0	61.9	±1.5/-0.0	9.5	0.8
2 1/2	74.4	73.9	64.2	61.2	...	...	...	...	8.76	7.67	...	...	...	...	92.1	108.0	±1.5/-0.0	16.0	19.0	5.0	43.0	5.0	15.7	19.0	...	63.5	±1.5/-0.0	73.0	±1.5/-0.0	9.5	0.8
3	90.3	89.8	79.4	76.4	...	...	...	...	9.52	8.30	...	...	...	...	111.1	127.0	±1.5/-0.0	16.0	19.0	5.0	44.5	5.0	19.0	22.4	...	69.9	±1.5/-0.0	88.9	±1.5/-0.0	9.5	0.8
4	115.7	115.2	103.8	100.7	...	...	...	...	10.69	9.35	...	...	...	...	141.3	158.8	±1.5/-0.0	19.0	19.0	5.0	48.0	5.0	22.4	28.4	...	76.2	±1.5/-0.0	114.3	±1.5/-0.0	9.5	0.8

NOTE:
(1) Average of socket wall thickness around periphery shall not be less than listed values.
The minimum values are permitted in localized areas.

Threaded Elbows, Tees, and Crosses

ASMEB16.11-2016

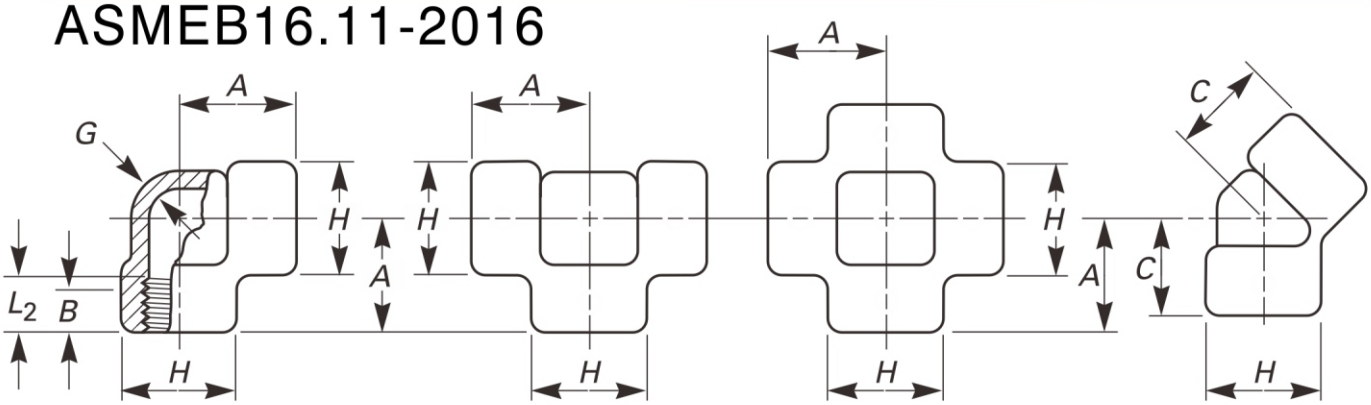

90° ELBOW TEE CROSS 45° ELBOW

Dimensions are in Millimeters

Nominal Pipe Size	Center-to-End Elbows, Tees, and Crosses, A			Center-to-End 45-deg Elbow, C			Outside Diameter of Band, H			Minimum Wall Thickness, G			Minimum Length of Thread [Note (1)]	
	2000	3000	6000	2000	3000	6000	2000	3000	6000	2000	3000	6000	B	L 2
1/8	21	21	25	17	17	19	22	22	25	3.18	3.18	6.35	6.4	6.7
1/4	21	25	28	17	19	22	22	25	33	3.18	3.30	6.60	8.1	10.2
3/8	25	28	33	19	22	25	25	33	38	3.18	3.51	6.98	9.1	10.4
1/2	28	33	38	22	25	28	33	38	46	3.18	4.09	8.15	10.9	13.6
3/4	33	38	44	25	28	33	38	46	56	3.18	4.32	8.53	12.7	13.9
1	38	44	51	28	33	35	46	56	62	3.68	4.98	9.93	14.7	17.3
1 1/4	44	51	60	33	35	43	56	62	75	3.89	5.28	10.59	17.0	18.0
1 1/2	51	60	64	35	43	44	62	75	84	4.01	5.56	11.07	17.8	18.4
2	60	64	83	43	44	52	75	84	102	4.27	7.14	12.09	19.0	19.2
2 1/2	76	83	95	52	52	64	92	102	121	5.61	7.65	15.29	23.6	28.9
3	86	95	106	64	64	79	109	121	146	5.99	8.84	16.64	25.9	30.5
4	106	114	114	79	79	79	146	152	152	6.55	11.18	18.67	27.7	33.0

NOTE: (1)Dimension B is minimum length of perfect thread.The length of useful thread(B plus threads with fully formed roots and flat crests) shall not be less than L2(effective length of external thread) required by American National Standard for PipeThreads(ASME B1.20.1;see para.6.3).

2.1.1 Nonstandard Pipe Wall Thickness. Since ASME B36.10 M does not include Schedule 160 nor Double Extra Strong thickness for NPS 1/8,1/4,and 3/8,the values inTable 9 shall be used as the nominal wall thicknesses of the pipe for rating purposes.

2.1.2 Combination End Fittings. The Class designation for fittings made with combinations of socket-welding and threaded ends shall be based on the end configuration that has the lowest rating from Table 8.

2.2 Wall Thickness Design for Special Dimension Pipe.

2.2.1 As thesefittings are to be used in connection with pipe,the minimum body wall thickness for socket-welding fittings must be equal to or greater than the nominal wall thickness of the pipe with which they are used.

2.2.2 The average socket wall thickness shall at least equal 1.25 times the nominal thickness of the corresponding pipe,and at no point shall the minimum thickness be less than 1.09 times the nominal pipe wall thickness (which is 1.25 x 0.875 x nominal pipe wall).

2.2.3 The minimum body wall thickness for threaded fittings shall be equal to or greater than the nominal wall thickness of the pipe with which they are used.

2.3 Pressure Test Capability

Pressure testing is not required by this Standard,but the fittings shall be capable of withstanding a hydrostatic test pressure required by the applicable piping code for seam-less pipe of material equivalent to the fitting forging and of the schedule or wall thickness correlated with the fitting Class and end connection of Table 8.

Threaded Street Elbows

ASMEB16.11-2016

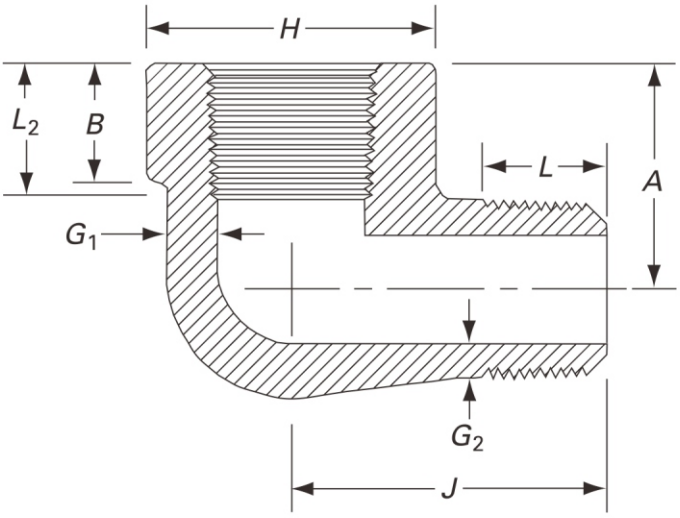

Dimensions are in Millimeters

Nominal Pipe Size	Center-to-Female End Street Ells, A [Note (1)] Class Designation 3000	6000	Center-to-Male End Street Ells,J Class Designation 3000	6000	Outside Diameterof Band,H [Note (2)] Class Designation 3000	6000	Minimum Wall Thickness, G1 Class Designation 3000	6000	Minimum Wall Thickness,G2 [Note(3)] Class Designation 3000	6000	Minimum Length Internal Thread [Note (4)] B	L2	Minimum Length Male Thread, L
1/8	19	22	25	32	19	25	3.18	5.08	2.74	4.22	6.4	6.7	10
1/4	22	25	32	38	25	32	3.30	5.66	3.22	5.28	8.1	10.2	11
3/8	25	28	38	41	32	38	3.51	6.98	3.50	5.59	9.1	10.4	13
1/2	28	35	41	48	38	44	4.09	8.15	4.16	6.53	10.9	13.6	14
3/4	35	44	48	57	44	51	4.32	8.53	4.88	6.86	12.7	13.9	16
1	44	51	57	66	51	62	4.98	9.93	5.56	7.95	14.7	17.3	19
1 1/4	51	54	66	71	62	70	5.28	10.59	5.56	8.48	17.0	18.0	21
1 1/2	54	64	71	84	70	84	5.56	11.07	6.25	8.89	17.8	18.4	21
2	64	83	84	105	84	102	7.14	12.09	7.64	9.70	19.0	19.2	22

NOTES:

(1) Dimension A of Table 2 for the appropriate fitting size may also be used at the option of the manufacturer.

(2) Dimension H of Table 2 for the appropriate fitting size may also be used at the option of the manufacturer.

(3) Wall thickness before threading.

(4) Dimension B is minimum length of perfect thread.The length of useful thread（B plus threads with fully formed roots and flat crests) shall not be less than L2 (effective length of external thread) required by American National Standard for Pipe Threads（ASME B1.20.1; see para. 6.3).

Threaded Couplings, Bosses, Caps, and Couplets

ASMEB16.11-2016

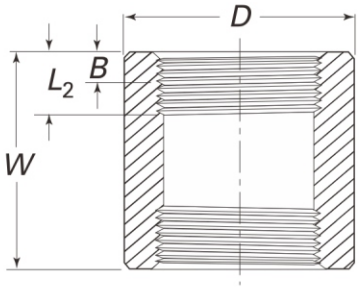

COUPLING

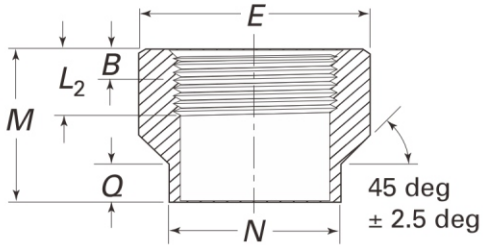

COUPLET

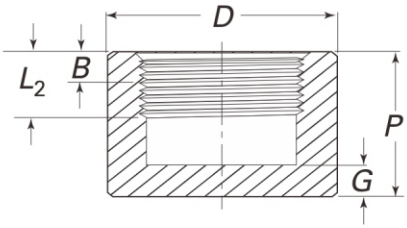

CAP

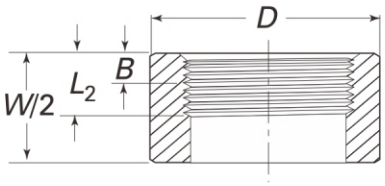

HALF-COUPLING

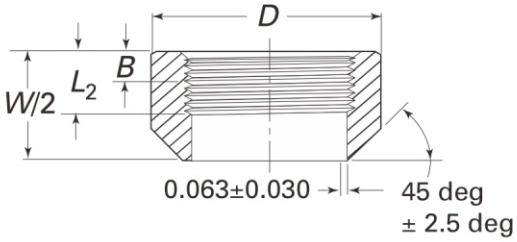

BOSS

Dimensions are in Millimeters

Nominal Pipe Size	Outside Diameter,D 3000	Outside Diameter,D 6000	Outside Diameter Couplet,E 3000	Outside Diameter Couplet,E 6000	Tol. ±	End-to-End Coupling, W 3000/6000	End-to-End Caps, P 3000	End-to-End Caps, P 6000	End-to-End Coupling 3000/6000	Tol. ±	Minimum End Wall Thickness, G 3000	Minimum End Wall Thickness, G 6000	Weld Ring Length,Q 3000/6000	Tol. ±	Wled Ring Diameter, N 3000/6000	Tol. ±	Minimum Length of Thread [Note(1)] 3000/6000 B	Minimum Length of Thread [Note(1)] 3000/6000 L2
1/8	16	22	…	…	…	32	19	22	…	…	4.8	6.4	…	…	…	…	6.4	6.7
1/4	19	25	23.8	25.4	±1.5/–0.0	35	25	27	30.2	±0.8/–0.0	4.8	6.4	9.5	0.8	17.5	±1.5/–0.0	8.1	10.2
3/8	22	32	27.0	31.8	±1.5/–0.0	48	32	27	30.2	±0.8/–0.0	4.8	6.4	9.5	0.8	20.7	±1.5/–0.0	9.1	10.4
1/2	28	38	33.4	38.1	±1.5/–0.0	48	32	33	33.4	±0.8/–0.0	6.4	7.9	9.5	0.8	23.8	±1.5/–0.0	10.9	13.6
3/4	35	44	38.1	44.5	±1.5/–0.0	51	37	38	34.9	±0.8/–0.0	6.4	7.9	9.5	0.8	27.0	±1.5/–0.0	12.7	13.9
1	44	57	46.1	57.2	±1.5/–0.0	60	41	43	42.9	±0.8/–0.0	9.7	11.2	9.5	0.8	33.4	±1.5/–0.0	14.7	17.3
1 1/4	57	64	55.6	63.5	±1.5/–0.0	67	44	46	47.6	±0.8/–0.0	9.7	11.2	9.5	0.8	42.9	±1.5/–0.0	17.0	18.4
1 1/2	64	76	63.5	76.2	±1.5/–0.0	79	44	48	50.8	±0.8/–0.0	11.2	12.7	9.5	0.8	49.2	±1.5/–0.0	17.8	18.4
2	76	92	79.4	79.4	±1.5/–0.0	86	48	51	57.2	±1.5/–0.0	12.7	15.7	9.5	0.8	61.9	±1.5/–0.0	19.0	19.2
2 1/2	92	108	92.1	92.1	±1.5/–0.0	92	60	64	63.5	±1.5/–0.0	15.7	19.0	9.5	0.8	73.0	±1.5/–0.0	23.6	28.9
3	108	127	111.1	111.1	±1.5/–0.0	108	65	68	69.9	±1.5/–0.0	19.0	22.4	9.5	0.8	114.3	±1.5/–0.0	25.9	30.5
4	140	159	141.3	141.3	±1.5/–0.0	121	68	75	76.2	±1.5/–0.0	22.4	28.4	9.5	0.8	114.3	±1.5/–0.0	27.7	33.0

The wall thickness away from the threaded ends shall meet the minimum wall thickness requirements of Table I-2 for the appropriate NPS and Class Designation fitting.

NOTE: (1) Dimension B is minimum length of perfect thread.

The length of useful thread (B plus threads with fully formed roots and flat crests) shall not be less than L2 (effective length of external thread) required by American National Standard for Pipe Threads (ASME B1.20.1; see para. 6.3).

Plugs and Bushings

ASMEB16.11-2016

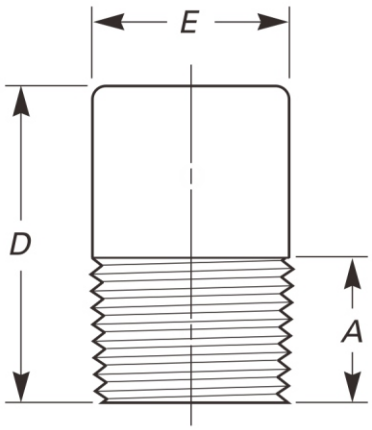

ROUND HEAD PLUG

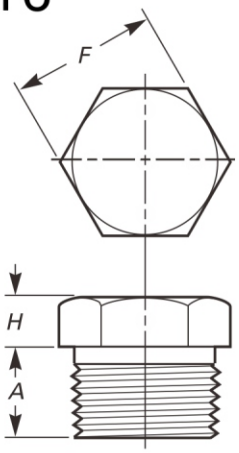

HEX HEAD PLUG

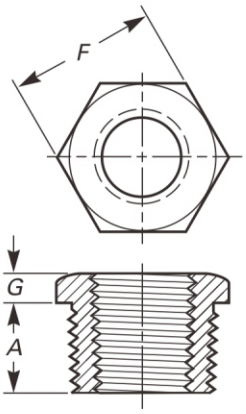

HEX HEAD BUSHING [NOTE (1)]

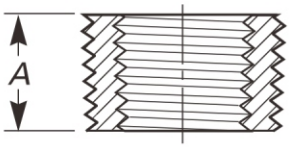

FLUSH BUSHING

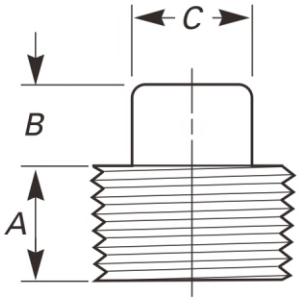

SQUARE HEAD PLUG

Dimensions are in Millimeters

Nominal Pipe Size	Minimum Length, A	Square Head Plugs		Round Head Plugs		Hex Plugs and Bushings		
		Minimum Square Height, B	Minimum Width Flats, C [Note (2)]	Nominal Head Diameter, E	Minimum Length, D	Nominal Width Flats, F [Note (2)]	Minimum Hex Height Bushing, G	Minimum Hex Height Plug, H
1/8	10	6	7.15	10	35	11.11	…	6
1/4	11	6	9.55	14	41	15.88	3	6
3/8	13	8	11.11	18	41	17.46	4	8
1/2	14	10	14.29	21	44	22.23	5	8
3/4	16	11	15.88	27	44	26.99	6	10
1	19	13	20.64	33	51	34.93	6	10
1 1/4	21	14	23.81	43	51	44.45	7	14
1 1/2	21	16	28.58	48	51	50.80	8	16
2	22	18	33.27	60	64	63.50	9	18
2 1/2	27	19	38.10	73	70	76.20	10	19
3	28	21	42.86	89	70	88.90	10	21
4	32	25	63.50	114	76	117.48	13	25

NOTES:

(1) Cautionary Note Regarding Hex Bushings: Hex head bushings of one-size reduction should not be used in services where they might be subject to harmful loads and forces other than internal pressures.

(2) Manufacturer's applied tolerance shall ensure dimension will fit U.S. Customary tooling.

UNION

THREADED END MSS-SP-83

H-Thrd's Minimum
4 Full Thrd's
Engagement Class
2A/2B Fit

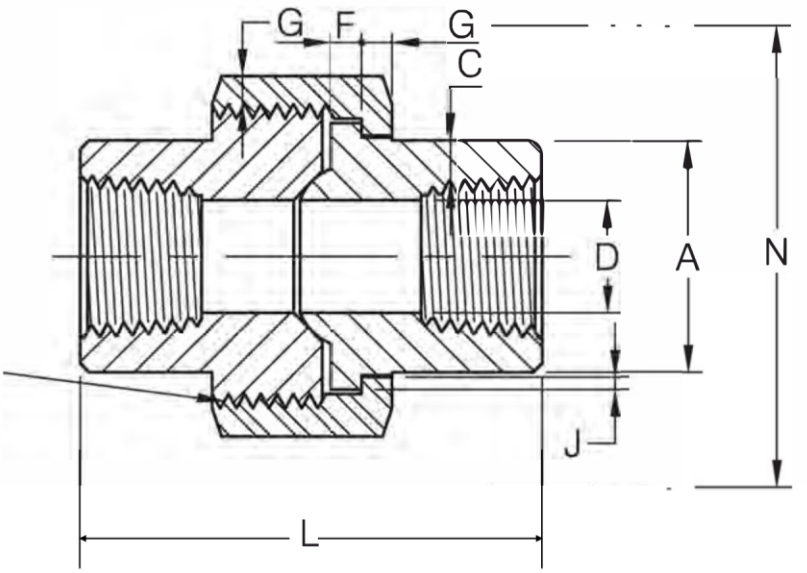

Dimensions are in Millimeters

Nominal Pipe Size	Pipe End Min. A	Wall Min. C	Water Way Bore D	Male Flange Min. F	Nut Min. G	Thrds. Per 25.4mm Max. H	Bearing Min. J	Length Assem. Nom. L	Clear Assem. Nut N
1/8	14.7	2.41	6.83 6.43	3.17	3.2	16	1.24	41.4	49
1/4	19.0	3.02	9.85 9.45	3.17	3.2	16	1.24	41.4	49
3/8	22.9	3.20	13.92 13.51	3.43	3.4	14	1.37	46.0	55
1/2	27.7	3.73	17.47 17.07	3.68	3.7	14	1.50	49.0	57
3/4	33.5	3.91	21.79 21.39	4.06	4.1	11	1.68	56.9	67
1	41.4	4.55	28.14 27.74	4.57	4.4	11	1.85	62.0	79
1-1/4	50.5	4.85	35.76 35.36	5.33	5.2	11	2.13	71.1	94
1-1/2	57.2	5.08	41.61 41.20	5.84	5.6	10	2.31	76.4	111
2	70.1	5.54	52.53 52.12	6.60	6.4	10	2.69	86.1	132
2-1/2	85.3	7.01	64.72 64.31	7.49	7.1	8	3.07	102.4	148
3	102.4	7.62	77.67 77.27	8.25	8.0	8	3.53	109.0	175

UNION

SOCKET WELD END MSS-SP-83

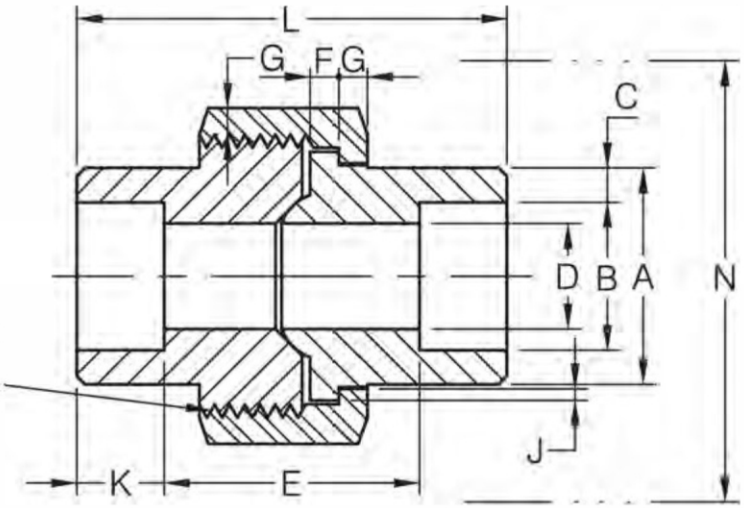

H-Thrd'sMinimum
4 Full Thrd's
Engagement
Class 2A/2B Fit

Dimensions are in Millimeters

Nominal Pipe Size	Pipe End Min. A	Socket Bore Dia. B	Socket Wall Min. C	Water Way Bore D	Laying Length E	Male Flange Min. F	Nut Min. G	Thrds. Per 25.4mm Max. H	Bearing Min. J	Depth of Socket Min. K	Length Assem. Nom. L	Clear Assem. Nut N
1/8	21.8	10.92 10.67	3.17	6.83 6.43	22.4 19.0	3.17	3.17	16	1.24	9.6	41.4	49
1/4	21.8	14.22 13.97	3.30	9.85 9.45	22.4 19.0	3.17	3.17	16	1.24	9.6	41.4	49
3/8	25.9	17.78 17.53	3.48	13.92 13.51	26.9 20.6	3.43	3.43	14	1.37	9.6	46.0	55
1/2	31.2	21.84 21.59	4.06	17.47 17.07	26.9 20.6	3.68	3.68	14	1.50	9.6	49.0	57
3/4	37.1	27.18 26.92	4.27	21.79 21.39	31.8 25.4	4.06	4.06	11	1.68	12.7	56.9	67
1	45.5	34.04 33.78	4.95	28.14 27.74	34.3 26.2	4.57	4.44	11	1.85	12.7	62.0	79
1-1/4	54.9	42.67 42.42	5.28	35.76 35.36	40.6 32.5	5.33	5.21	11	2.13	12.7	71.1	94
1-1/2	61.5	48.77 48.51	5.54	41.61 41.20	42.2 34.0	5.84	5.59	10	2.31	12.7	76.5	111
2	75.2	61.47 61.21	6.05	52.53 52.12	45.5 37.3	6.60	6.35	10	2.69	15.8	86.1	132
2-1/2	91.7	74.17 73.66	7.65	64.72 64.31	61.7 52.1	7.49	7.11	8	3.07	15.8	102.4	148
3	109.2	90.17 89.66	8.31	77.67 77.27	63.8 53.6	8.25	8.00	8	3.53	15.8	109.0	175

REDUCER INSERTS

SOCKET WELDING MSS-SP-79

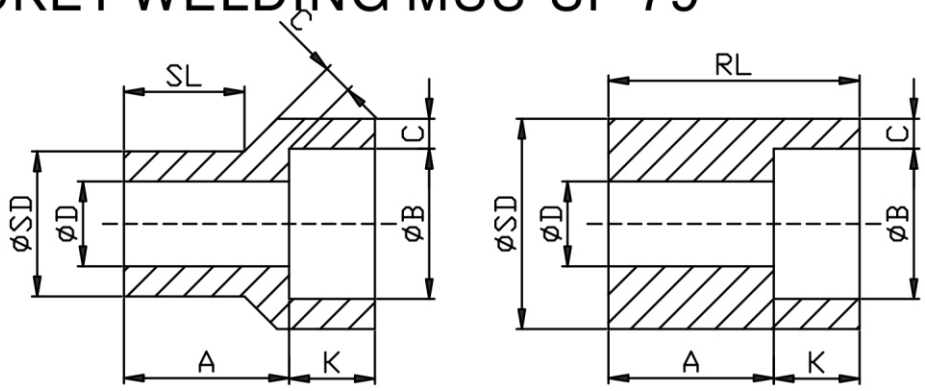

TYPE1 TYPE2(1)

Dimensions are in Millimeters

Nominal Pipe Size	Type(2)		Socket Dia.	Socket Depth Min.	Shank Dia	Laying Length A		Bore D		Wall Min. C		Length SL		Length RL(Min)	
	3M	6M	B	K	SD	3M	6M	3M	6M	3M	6M	3M	6M	3M	6M
3/8X1/4	1	1	14.35	10	17.15	19	21	9.0	6.5	3.78	4.60	14	16		
1/2X3/8	1	1	17.78	10	21.34	21	23	12.5	9.0	4.01	5.03	16	16		
1/2X1/4	1	1	14.35	10	21.34	21	21	9.0	6.5	3.78	4.60	16	16		
3/4X1/2	1	1	21.97	10	26.67	22	25	16.0	11.5	4.67	5.97	17	19		
3/4X3/8	2	1	17.78	10	26.67	16	22	12.5	9.0	4.01	5.03		19	27	
3/4X1/4	2	2	14.35	10	26.67	18	22	9.0	6.5	3.78	4.60			27	32
1X3/4	1	1	27.31	13	33.40	24	28	21.0	15.5	4.90	6.96	19	21		
1X1/2	2	1	21.97	10	33.40	16	28	16.0	11.5	4.67	5.97		21	28	
1X3/8	2	2	17.78	10	33.40	18	22	12.5	9.0	4.01	5.03			28	33
1X1/4	2	2	14.35	10	33.40	19	24	9.0	6.5	3.78	4.60			28	33
1-1/4X1	1	1	34.04	13	42.16	25	30	26.5	20.5	5.69	7.92	21	22		
1-1/4X3/4	2	2	27.31	13	42.16	18	21	21.0	15.5	4.90	6.96			32	35
1-1/4X1/2	2	2	21.97	10	42.16	19	22	16.0	11.5	4.67	5.97			32	35
1-1/4X3/8	2	2	17.78	10	42.16	21	24	12.5	9.0	4.01	5.03			32	35
1-1/4X1/4	2	2	14.35	10	42.16	22	25	9.0	6.5	3.78	4.60			32	35
1-1/2X1-1/4	1	1	42.80	13	48.26	28	35	35.0	29.5	6.07	7.92	22	25		
1-1/2X1	2	1	34.04	13	48.26	18	29	26.5	20.5	5.69	7.92		25	33	
1-1/2X3/4	2	2	27.31	13	48.26	19	25	21.0	15.5	4.90	6.96			33	40
1-1/2X1/2	2	2	21.97	10	48.26	21	27	16.0	11.5	4.67	5.97			33	40
1-1/2X3/8	2	2	17.78	10	48.26	22	28	12.5	9.0	4.01	5.03			33	40
2X1-1/2	1	1	48.90	13	60.32	32	39	41.0	34.0	6.35	8.9	25	28		
2X1-1/4	2	2	42.80	13	60.32	21	24	35.0	29.5	6.07	7.92			38	41
2X1	2	2	34.04	13	60.32	22	25	26.5	21.0	5.69	7.92			38	41
2X3/4	2	2	27.31	13	60.32	24	27	21.0	15.5	4.90	6.96			38	41
2X1/2	2	2	21.97	10	60.32	25	28	16.0	11.5	4.67	5.97			38	41

(1) At the option of the manufacturer Type 2 Reducers may be furnished in Type 1confiquration.
(2) 3M & 6M symbols denote 3000 and 6000 classes.

REDUCER INSERTS

SOCKET WELDING MSS-SP-79

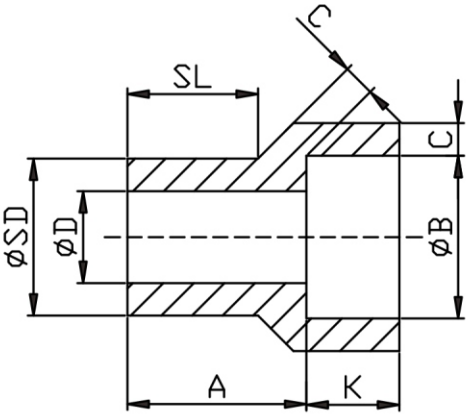

TYPE1

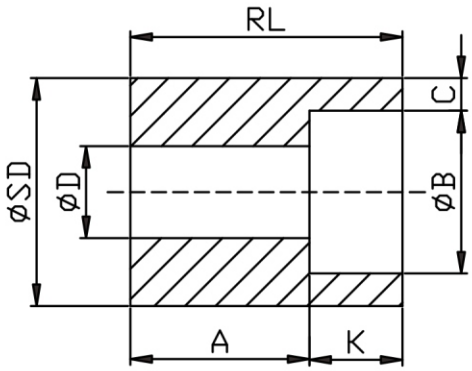

TYPE2(1)

(Continued)

Nominal Pipe Size	Type(2)		Socket Dia.	Socket Depth Min.	Shank Dia	Laying Length A		Bore D		Wall Min. C		Length SL		Length RL(Min)	
	3M	6M	B	K	SD	3M	6M	3M	6M	3M	6M	3M	6M	3M	6M
2-1/2X2	1	1	61.37	16	73.02	46	43	52.5	43	6.93	10.92	38	32		
2-1/2X1-1/2	2	2	48.90	13	73.02	35		41.0		6.35				54	
2-1/2X1-1/4	2	2	42.80	13	73.02	37		35.0		6.07				54	
2-1/2X1	2	2	34.04	13	73.02	38		26.5		5.69				54	
2-1/2X3/4	2	2	27.31	13	73.02	40		21.0		4.90				54	
3X2-1/2	1		74.07	16	88.90	38		62.5		8.76		32			
3X2	2		61.37	16	88.90	25		52.5		6.93				48	
3X1-1/2	2		48.90	13	88.90	29		41.0		6.35				48	
3X1-1/4	2		42.80	13	88.90	30		35.0		6.07				48	
3X1	2		34.04	13	88.90	32		26.5		5.69				48	
4X3	2		90.04	16	114.30	33		78.0		9.50				60	
4X2-1/2	2		74.07	16	114.30	38		62.5		8.76				60	
4X2	2		61.37	16	114.30	38		52.5		6.93				60	
4X1-1/2	2		48.90	13	114.30	42		41.0		6.35				60	
4X1-1/4	2		42.80	13	114.30	43		35.0		6.07				60	

(1) At the option of the manufacturer Type 2 Reducers may be furnished in Type 1confiquration.
(2) 3M & 6M symbols denote 3000 and 6000 classes.

TOLERANCES

Laying Length A- Sizes 3/8" thru3/4"+1. 5mm /- 0. 0mm
Sizes 1" thru2" +2.0mm/-0.0mm
Sizes 2-1/2" thru4"+2.5mm/—0.0mm

Laying Length B- Sizes 1/4" thru2" ±0.25mm
Sizes 2-1/2" thru3"+ 0.4mm / - 0. 25mm

Bore D -Sizes 1/4" thru2"±0.8mm
-Sizes2- 1/2" thru3"±1.5mm

Shank Dia SD - Sizes3/8" thru1-1/2"±0.25mm
Sizes 2" thru3"±0.50mm
Sizes 4"±0.75mm

ShankLg. SL -Sizes3/8" thru3/4" + 0.0mm/- 1.5mm
Sizes 1" thru2"+ 0. 0mm/-2.0mm
Sizes2- 1/2" thru4" + 0.0mm/-2.5mm

SWAGED NIPPLES

MSS-SP-95

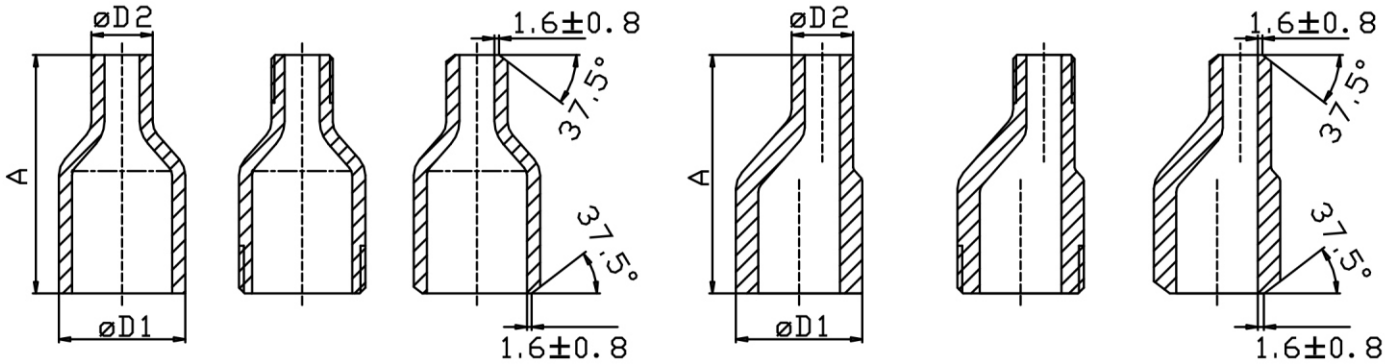

PBE TBE BBE PBE TBE BBE

CONCENTRIC

Dimensions are in Millimeters

Nominal Pipe Size	Outside Diameter Large End D1	Outside Diameter Small End D2	End To End "A"
1/4X1/8	13.7	10.3	57
3/8X1/8	17.1	10.3	64
3/8X1/4	17.1	13.7	64
1/2X1/8	21.3	10.3	70
1/2X1/4	21.3	13.7	70
1/2X3/8	21.3	17.1	70
3/4X1/8	26.7	10.3	76
3/4X1/4	26.7	13.7	76
3/4X3/8	26.7	17.1	76
3/4X1/2	26.7	21.3	76
1X1/8	33.4	10.3	89
1X1/4	33.4	13.7	89
1X3/8	33.4	17.1	89
1X1/2	33.4	21.3	89
1X3/4	33.4	26.7	89
1-1/4X1/8	42.2	10.3	102
1-1/4X1/4	42.2	13.7	102

ECCENTRIC

Dimensions are in Millimeters

Nominal Pipe Size	Outside Diameter Large End D1	Outside Diameter Small End D2	End To End "A"
2X1/8	60.3	10.3	165
2X1/4	60.3	13.7	165
2X3/8	60.3	17.1	165
2X1/2	60.3	21.3	165
2X3/4	60.3	26.7	165
2X1	60.3	33.4	165
2X1-1/4	60.3	42.2	165
2X1-1/2	60.3	48.3	165
2-1/2X1/8	73.0	10.3	178
2-1/2X1/4	73.0	13.7	178
2-1/2X3/8	73.0	17.1	178
2-1/2X1/2	73.0	21.3	178
2-1/2X3/4	73.0	26.7	178
2-1/2X 1	73.0	33.4	178
2-1/2X1-1/4	73.0	42.2	178
2-1/2X1-1/2	73.0	48.3	178
2-1/2X2	73.0	60.3	178

SWAGED NIPPLES

MSS-SP-95

(Continued)

Nominal Pipe Size	Outside Diameter Large End D1	Outside Diameter Small End D2	End To End "A"
1-1/4X3/8	42.2	17.1	102
1-1/4X1/2	42.2	21.3	102
1-1/4X3/4	42.2	26.7	102
1-1/4X1	42.2	33.4	102
1-1/2X1/8	48.3	10.3	114
1-1/2X1/4	48.3	13.7	114
1-1/2X3/8	48.3	17.1	114
1-1/2X1/2	48.3	21.3	114
1-1/2X3/4	48.3	26.7	114
1-1/2X1	48.3	33.4	114
1-1/2X1-1/4	48.3	42.2	114
3-1/2X1/4	101.6	13.7	203
3-1/2X3/8	101.6	17.1	203
3-1/2X1/2	101.6	21.3	203
3-1/3X3/4	101.6	26.7	203
3-1/2X1	101.6	33.4	203
3-1/2X1-1/4	101.6	42.2	203
3-1/2X1-1/2	101.6	48.3	203
3-1/2X2	101.6	60.3	203
3-1/2X2-1/2	101.6	73.0	203
3-1/2X3	101.6	88.9	203
4X1/4	114.3	13.7	229

Nominal Pipe Size	Outside Diameter Large End D1	Outside Diameter Small End D2	End To End "A"
3X1/8	88.9	10.3	203
3X1/4	88.9	13. 7	203
3X3/8	88.9	17.1	203
3X1/2	88.9	21.3	203
3X3/4	88.9	26.7	203
3X1	88.9	33.4	203
3 X1-1/4	88.9	42.2	203
3X1-1/2	88.9	48.3	203
3X2	88.9	60.3	203
3X2-1/2	88.9	73.0	203
3-1/2X1/8	101.6	10.3	203
4X3/8	114.3	17.1	229
4X1/2	114.3	21.3	229
4X3/4	114.3	26.7	229
4X1	114.3	33.4	229
4X1-1/4	114.3	42.2	229
4X1-1/2	114.3	48.3	229
4X2	114.3	60.3	229
4X2-1/2	114.3	73.0	229
4X3	114.3	88.9	229
4X3-1/2	114.3	101.6	229

PBE:PLAIN BOTH ENDS
PSE:PLAIN SMALL ENDS
PLE:PLAIN LARGE ENDS

BBE:BEVEL BOTH ENDS
BSE:BEVEL SMALL ENDS
BLE:BEVEL LARGE ENDS

TBE:THREAD BOTH ENDS
TSE:THREAD SMALL ENDS
TLE:THREAD LARGE ENDS

TOLERANCES

Dimensions are in Millimeters

Nominal Pipe Size	Overall Length (mm)	Outside Diameter at End: Square Cut Ends (mm)	Outside Diameter at End: Other End Connections (mm)	Wall Thickness (see Note 1)
1/8 —3/8	±2	+0.40 -0.80	±0.80	Not less than 87.5% of nominal wall thickness
1/2 —1-1/2	±2	+0.40 -0.80	+1.50 -0.80	
2—2-1/2	±3	±0.80	+1.50 -0.80	
3—4	±3	±0.80	+1.50	

Note 1 :
Prior to threading or grooving

BULL PLUGS

MSS-SP-95

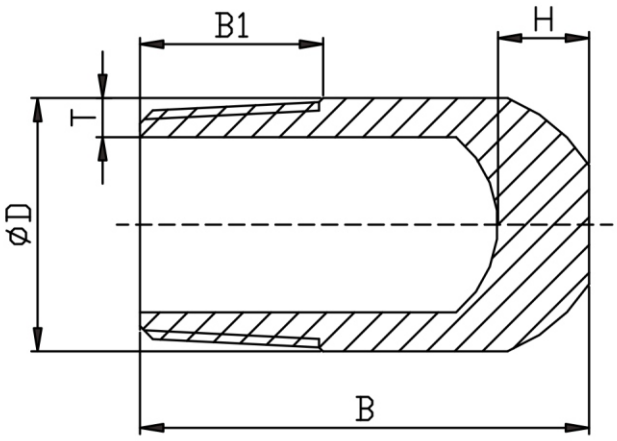

Dimensions are in Millimeters

Nominal Pipe Size	D	B	B1	T1 Sch 40	T2 Sch80	H
1/8	10.3	34	9.5	2.0	2.6	13
1/4	13.7	34	11.0	2.4	3.3	13
3/8	17.1	57	12.5	2.5	3.5	13
1/2	21.3	64	14.5	3.0	4.1	13
3/4	26.7	70	16.0	3.2	4.3	16
1	33.4	76	19.0	3.7	5.0	16
1-1/4	42.2	83	20.5	4.0	5.4	16
1-1/2	48.3	89	20.5	4.1	5.6	16
2	60.3	102	22.0	4.3	6.1	18
2-1/2	73.0	127	27.0	5.7	7.7	18
3	88.9	152	28.5	6.1	8.4	18
4	114.3	178	32.0	6.6	9.5	18

DIMENSIONAL TOLERANCE

ASME B16.11-1991

OF FORGED SOCKET WELDING FITTING

Unit : m/m

Item	Type of pipe ftting	Nominal diameter				
		A	6 to 8	10 to 20	25 to 50	65 to 100
		B	1/8 to 1/4	3/8 to 3/4	1to2	2-1/2 to 4
Bore diameter of socket (B)	All types of pipe fttings	+0.3 -0				+0.4 -0
Bore diameter of ftting (D)		±0.4				±0.8
Centricity of bore (X)		±0.8				
Coin cidence of axes (Y)		1.5/300 Max				
Center to bottom of socket (A)	45° 90° Elbow, Tee	±1	±1.5		±2	±2.5
Bottom to bottom of socket (E)	Full coupling	±1.5	±3		±4	±5
Bottom of socket to opposite face (F)	Half coupling	±1	±1.5		±2	±2.5

HEX NIPPLE

ANSI/ASME B1.20.1

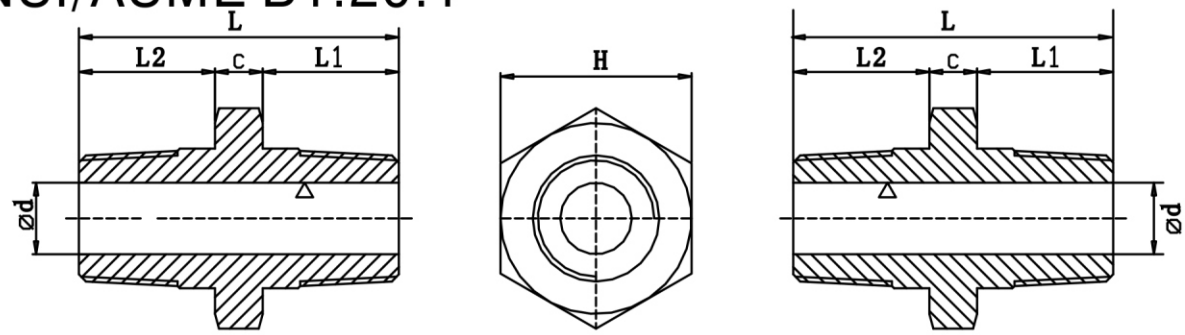

Dimensions are in Millimeters

Nominal Pipe Size	C	L1	L	d	H	Unit Weigh in Kgs
1/8	6	10	26	4	12	0.03
1/4	8	14	36	6.7	17	0.04
3/8	8	14	36	8.9	19	0.05
1/2	9	19	47	11.9	24	0.09
3/4	10	19	48	16	30	0.15
1	11	24	59	20.1	35	0.27
1-1/4	12	24	60	27.9	46	0.45
1-1/2	14	24	62	32	50	0.62
2	16	26	68	39.9	65	1.03
2-1/2	18	38	94	55.1	80	1.51
3	20	40	100	65	95	2.22
4	24.5	40	105	85	125.5	4

Nominal Pipe Size	C	L1	L2	L	d	H	unit weight inkgs
3/8X1/4	8.0	14.0	14.0	36.0	6.7	19.0	0.05
1/2X1/4	9.0	19.0	14.0	42.0	6.7	24.0	0.09
1/2X3/8	9.0	19.0	14.0	42.0	8.9	24.0	0.09
3/4X1/4	10.0	19.0	14.0	43.0	6.7	30.0	0.15
3/4X3/8	10.0	19.0	14.0	43.0	8.9	30.0	0.15
3/4X1/2	10.0	19.0	19.0	48.0	11.9	30.0	0.15
1X3/8	11.0	24.0	14.0	49.0	8.9	34.0	0.27
1X1/2	11.0	24.0	19.0	54.0	11.9	34.0	0.27
1X3/4	11.0	24.0	19.0	54.0	16.0	34.0	0.27
1-1/4X1/2	12.0	24.0	19.0	55.0	11.9	46.0	0.45
1-1/4X3/4	12.0	24.0	19.0	55.0	16.0	46.0	0.45
1-1/4X1	12.0	24.0	24.0	60.0	20.1	46.0	0.45
1-1/2X3/4	14.0	24.0	19.0	57.0	16.0	50.0	0.62
1-1/2X1	14.0	24.0	24.0	62.0	20.1	50.0	0.62
1-1/2X1-1/4	14.0	24.0	24.0	62.0	27.9	50.0	0.62
2X1	16.0	26.0	24.0	66.0	20.1	65.0	1.03
2X1-1/4	16.0	26.0	24.0	66.0	27.9	65.0	1.03
2X1-1/2	16.0	26.0	24.0	66.0	32.0	65.0	1.03
2-1/2X1-1/4	18.0	38.0	24.0	80.0	27.9	80.0	1.51
2-1/2X1-1/2	18.0	38.0	24.0	80.0	32.0	80.0	1.51
2-1/2X2	18.0	38.0	26.0	82.0	39.9	80.0	1. 51
3X1-1/2	20.0	40.0	24.0	84.0	32.0	95.0	2.22
3X2	20.0	40.0	26.0	86.0	39.9	95.0	2.22
3X2-1/2	20.0	40.0	38.0	98.0	55.1	95.0	2.22

H. Size 2-1/2 and smaller are Hexgonal bodies, size 3 is Octagonal body.

THREADOLETS

REDUCING SIZES MSS-SP-97

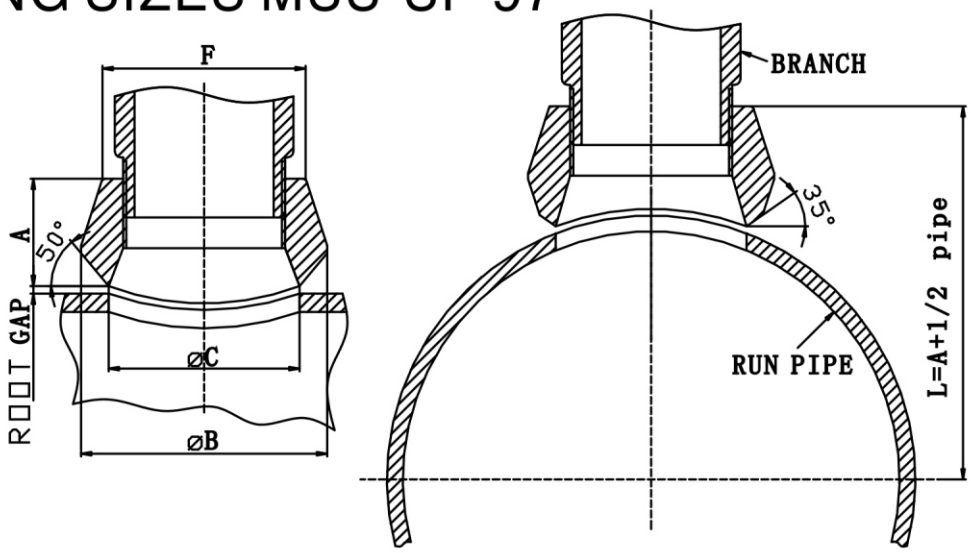

3000 Lb Standard and extra strong
Dimensions are in Millimeters

Run Pipe Size (in)	Out-Let Pipe NPS	A	B	C	F
36 -3/8	1/8	19.1	25.4	15.9	17.3
3/8	1/4	19.1	25.4	15.9	22.0
1/2	3/8	20.6	31.8	19.1	25.8
3/4	1/2	25.4	34.9	23.8	31.3
1	3/4	26.9	44.5	30.2	37.1
1-1/4	1	33.3	54.0	36.5	45.5
1-1/2	1-1/4	33.3	65.1	44.5	54.9
2	1-1/2	35.1	73.0	50.8	61.6
2-1/2	2	38.1	88.9	65.1	75.3
3	2-1/2	46.0	103.2	76.2	91.7
4	3	50.8	122.4	93.7	109.1
6	4	57.2	152.4	120.7	137.2

6000 Lb Schedule 160 and double extra strong
Dimensions are in Millimeters

Run Pipe Size (in)	Out-Let Pipe NPS	A	B	C	F
36 -3/4	1/2	31.8	44.5	19.1	33.9
1	3/4	36.6	50.8	25.4	41.2
1-1/4	1	39.6	61.9	33.3	49.9
1-1/2	1-1/4	41.2	69.9	38.1	58.6
2	1-1/2	42.9	82.6	49.2	66.7
2-1/2	2	52.3	103.2	69.9	83.2

SOCKOLETS

REDUCING SIZES MSS-SP-97

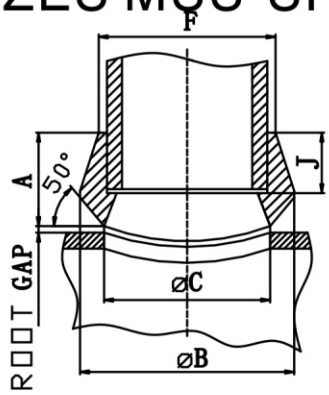

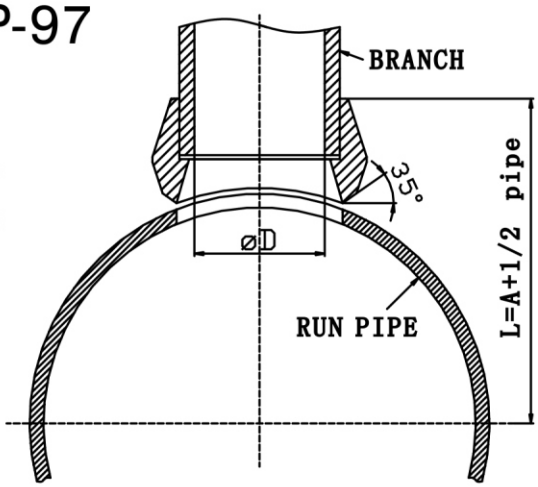

3000 Lb Standard and extra strong

Dimensions are in Millimeters

Run Pipe Size (in)	Out-Let Pipe NPS	A	B	C	D	F	J
36 -3/8	1/8	19.1	25.4	15.9	10.9	17.3	9.5
3/8	1/4	19.1	25.4	15.9	14.4	22.0	9.5
1/2	3/8	20.6	31.8	19.1	17.8	25.8	9.5
3/4	1/2	25.4	34.9	23.8	22.0	31.3	11.1
1	3/4	26.9	44.5	30.2	27.3	37.1	12.7
1-1/4	1	33.3	54.0	36.5	34.1	45.5	13.5
1-1/2	1-1/4	33.3	65.1	44.5	42.8	54.9	15.1
2	1-1/2	35.1	73.1	50.8	48.9	61.6	15.9
2-1/2	2	38.1	88.9	65.1	61.4	75.3	17.5
3	2-1/2	39.6	103.2	76.2	74.2	91.7	23.8
4	3	44.5	122.2	93.7	90.1	109.1	28.6
6	4	47.8	152.4	120.7	115.8	137.2	29.4

6000 Lb Schedule 160 and double extra strong

Dimensions are in Millimeters

Run Pipe Size (in)	Out-Let Pipe NPS	A	B	C	D	F	J
36 -3/4	1/2	31.8	44.5	19.1	22.0	33.9	9.5
1	3/4	36.6	50.8	25.4	27.3	41.2	14.3
1-1/4	1	39.6	61.9	33.3	34.1	49.9	15.9
1-1/2	1-1/4	41.2	69.9	38.1	42.8	58.6	20.6
2	1-1/2	42.9	82.6	49.2	48.9	66.7	20.6
2-1/2	2	52.3	103.2	58.7	61.4	83.2	22.2

WELDOLETS

REDUCING SIZES MSS-SP-97

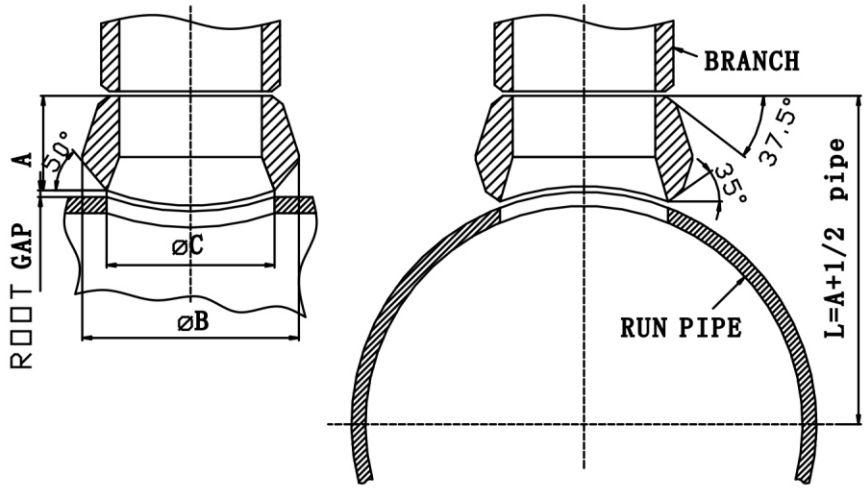

STANDARD WEIGHT

Dimensions are in Millimeters

Run Pipe Size(in)	Out-Let Pipe NPS (in)	A	B	C
36 -3/8	1/8	15.8	25.4	15.9
3/8	1/4	15.8	25.4	15.9
1/2	3/8	19.1	31.8	19.1
3/4	1/2	19.1	34.9	23.8
1	3/4	22.4	44.5	30.2
1-1/4	1	26.9	54.0	36.5
1-1/2	1-1/4	31.8	65.1	44.5
2	1-1/2	33.3	73.0	50.8
2-1/2	2	38.1	88.9	65.1
3	2-1/2	41.2	103.2	76.2
4	3	44.5	122.2	93.7
6	3-1/2	47.8	142.9	112.7
5	4	50.8	152.4	120.7
6	5	57.2	179.4	141.3
8	6	60.5	215.9	169.9
10	8	69.9	263.5	220.7
12	10	77.7	322.3	274.6
14	12	85.9	368.3	325.4
16	14	88.9	409.6	357.2
18	16	93.7	457.6	408.0
20	18	96.8	520.7	458.8
22	20	101.6	571.5	508.0
26	24	115.8	689.0	614.4

WELDOLETS

REDUCING SIZES MSS-SP-97

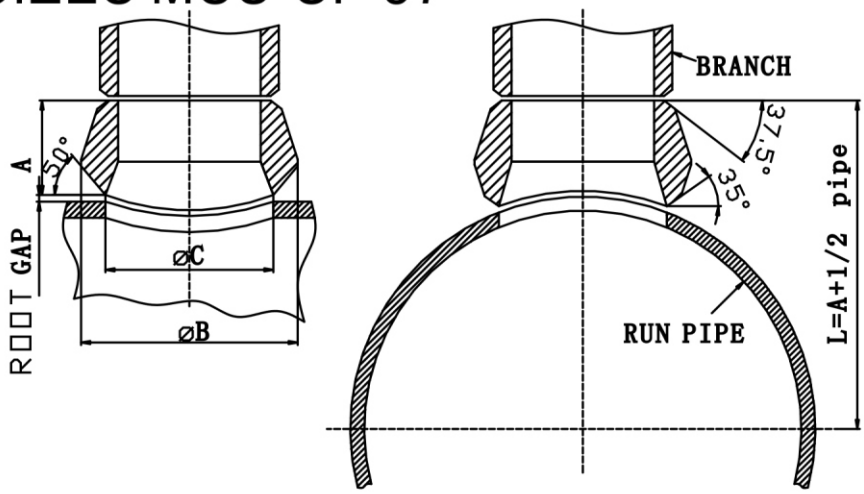

EXTRA STRONG

Dimensions are in Millimeters

Run Pipe Size(in)	Out-Let Pipe NPS (in)	A	B	C
36 -3/8	1/8	15.8	25.4	15.9
3/8	1/4	15.8	25.4	15.9
1/2	3/8	19.1	31.8	19.1
3/4	1/2	19.1	34.9	23.8
1	3/4	22.4	44.5	30.2
1-1/4	1	26.9	54.0	36.5
1-1/2	1-1/4	31.8	65.1	44.5
2	1-1/2	33.3	73.0	50.8
2-1/2	2	38.1	88.9	65.1
3	2-1/2	41.2	103.2	76.2
3-1/2	3	44.5	122.2	93.7
4	3-1/2	47.8	142.9	112.7
5	4	50.8	152.4	120.7
6	5	57.2	179.4	141.3
8	6	77.7	225.4	169.9
10	8	98.6	292.1	220.7
12	10	93.7	323.9	265.1
14	12	103.1	379.4	317.5
16	14	100.1	431.8	350.8
18	16	106.2	466.7	403.2
20	18	111.3	523.9	455.6
22	20	119.1	582.6	509.6
26	24	139.7	708.0	612.8

WELDOLETS

REDUCING SIZES MSS-SP-97

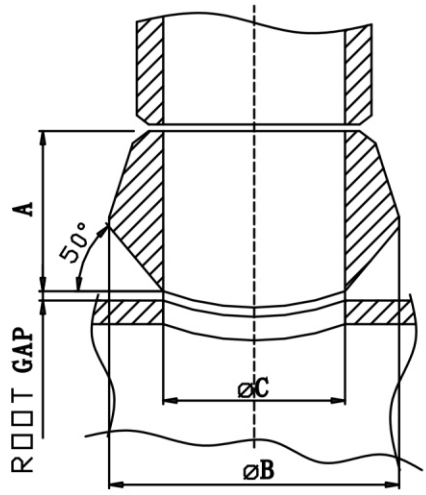

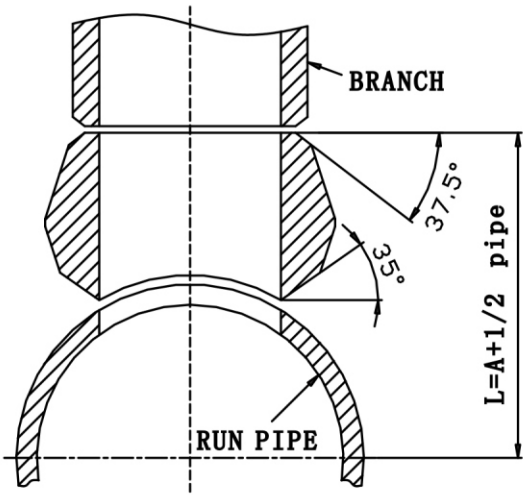

SCHEDULE 160 and DOUBLE EXTRA STRONG

Dimensions are in Millimeters

Run Pipe Size (in)	Out-Let Pipe NPS (in)	A	B	C
36 -3/4	1/2	28.5	34.9	14.3
1	3/4	31.8	44.5	19.1
1-1/4	1	38.1	50.8	25.4
1-1/2	1-1/4	44.5	61.9	33.3
2	1-1/2	50.8	69.9	38.1
2-1/2	2	55.4	81.0	42.9
3	2-1/2	62.0	96.8	54.0
4	3	73.2	120.7	73.0
5	4	84.1	152.4	98.4
6	5	93.7	187.3	122.2
8	6	104.7	220.7	140.1

DIMENSIONS OF SEAMLESS STEEL PIPE AND SEAMLESS STAINLESS STEEL PIPE

(ANSI B36.10M - 1985 , ANSI B36.19M- 1985)

Unit:mm

TOL ERANCES			NPS	STEEL PIPE																ST. ST PIPE			
A53 A106	API 5L	A530	IN	Outside Dia.			Wall Thickness																
O.D.	O.D.	O.D.		STD	MAX	MIN	S/10	S/20	S/30	S/40	STD	S/60	XS	S/80	S/100	S/120	S/140	S/160	XXS	S/5S	S/10S	S/40S	S/80S
+1/64"	+1/64"	+1/64"	1/8	10.3	10.7	9.5				1.7	S/40		S/80	2.4				3.2	4.8		1.2	1.7	2.4
			1/4	13.7	14.1	12.9				2.2	S/40		S/80	3.0				3.7	6.1		1.7	2.2	3.0
			3/8	17.1	17.5	16.3				2.3	S/40		S/80	3.2				4.0	6.4		1.7	2.3	3.2
-1/32"		+1/32"	1/2	21.3	21.7	20.5				2.8	S/40		S/80	3.7				4.7	7.5	1.7	2.1	2.8	3.7
			3/4	26.7	27.1	25.9				2.9	S/40		S/80	3.9				5.5	7.8	1.7	2.1	2.9	3.9
	-1/32"		1	33.4	33.8	32.8				3.4	S/40		S/80	4.5				6.4	9.1	1.7	2.8	3.4	4.5
			1-1/4	42.2	42.6	41.4				3.6	S/40		S/80	4.9				6.4	9.7	1.7	2.8	3.6	4.9
			1-1/2	48.3	48.7	47.5				3.7	S/40		S/80	5.1				7.1	10.2	1.7	2.8	3.7	5.1
		-1/32"	2	60.3	60.9	59.7				3.9	S/40		S/80	5.5				8.7	11.1	1.7	2.8	3.9	5.5
			2-1/2	73.0	73.7	72.2				5.2	S/40		S/80	7.0				9.5	14.0	2.1	3.0	5.2	7.0
		-1/32"	3	88.9	89.8	88.0				5.5	S/40		S/80	7.6				11.1	15.2	2.1	3.0	5.5	7.6
			3-1/2	101.6	102.6	100.6				5.7	S/40		S/80	8.1						2.1	3.0	5.7	8.1
			4	114.3	115.4	113.2				6.0	S/40		S/80	8.6		11.1		13.5	17.1	2.1	3.0	6.0	8.6
		+1/16"	5	141.3	142.7	139.9				6.6	S/40		S/80	9.5		12.7		15.9	19.1	2.8	3.4	6.6	9.5
	±0.75%		6	168.3	170.0	166.6				7.1	S/40		S/80	11.0		14.3		18.2	21.9	2.8	3.4	7.1	11.0
±1%		-1/32"	8	219.3	221.3	216.9		6.4	7.0	8.2	S/40	10.3	S/80	12.7	15.1	18.2	20.6	23.0	22.2	2.8	3.8	8.2	12.7
		+3/32"	10	273.1	275.8	270.4		6.4	7.8	9.3	S/40	12.7	S/60	15.1	18.2	21.5	25.4	28.6		3.4	4.2	9.3	12.7
			12	323.9	327.1	320.7		6.4	8.4	10.3	9.5	14.3	12.7	17.4	21.4	25.4	28.6	33.3		4.2	4.6	9.5	12.7
		-1/32"	14	355.6	359.2	352.0	6.4	7.9	9.5	11.1	S/30	15.1	12.7	19.1	23.8	27.8	31.8	35.7					
			16	406.4	410.5	402.3	6.4	7.9	9.5	12.7	S/30	16.7	S/40	21.4	26.2	30.9	36.5	40.5					
			18	457.2	461.8	452.6	6.4	7.9	11.1	14.3	9.5	19.1	12.7	23.8	29.4	34.9	39.7	45.2					
	+0.15%	+1/8"	20	508.0	513.1	502.9	6.4	9.5	12.7	15.1	S/20	20.8	S/30	26.2	32.5	38.1	44.5	50.0					
	-0.25%	-1/32"	24	609.6	615.7	603.5	6.4	9.5	14.3	17.4	S/20	24.6	12.7	30.9	38.9	46.0	52.4	59.5					

-VALVE

首龍工業股份有限公司
SOWLONG INDUSTRIAL . CO.,LTD.

經銷商

臺灣總公司
TAIWAN COMPANY
地址：嘉義縣民雄工業區中山路40號
ADD: NO.40 Zhongshan Road, Ming Shung
Industrial District, Chiayi, Taiwan, R.O.C
電話 TEL: 05-2215962 2215963
傳真 FAX: 05-2214361 2215965
E-mail: sowlong3@hotmail.com
http://www.sowlong.com.tw

6D-0541

0035